NOTICE OF PROPRIETARY RIGHTS THIS DOCUMENT CONTAINS CONFIDENTIAL TECHNICAL DATA, INCLUDING TRADE SECRETS, PROPRIETARY TO TIMES MICROWAVE SYSTEMS. DISCLOSURE OF THIS DATA IS EXPRESSLY CONDITIONED UPON YOUR ASSENT THAT ITS USE IS LIMITED TO USE WITHIN YOUR COMPANY ONLY. ANY OTHER USE IS STRICTLY PROHIBITED WITHOUT THE PRIOR WRITTEN CONSENT OF TIMES MICROWAVE SYSTEMS.

SYM	REVISION DESCRIPTION	DFTM	DATE	APPD	DATE
A	RELEASED FOR PRODUCTION	N.N.N	4/22/14	J.D.B.	4/23/14
B	CHANGED PER CDC #47089	D.J.H.	6/29/17	J.D.B.	7/6/17

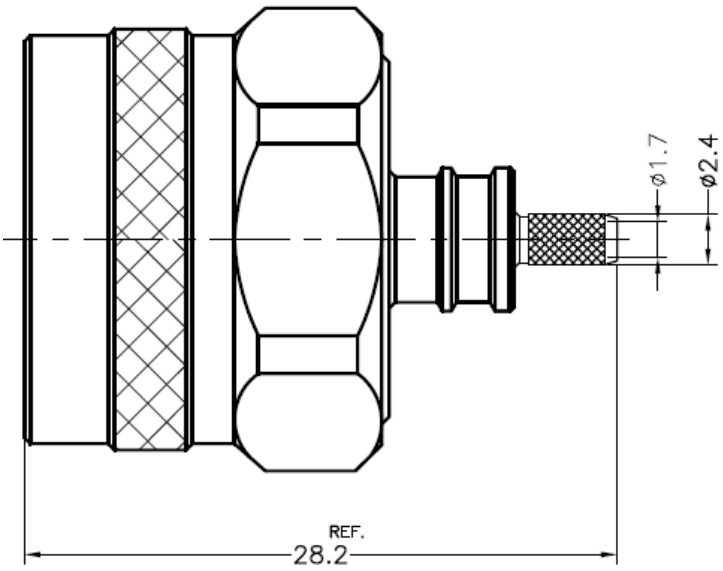

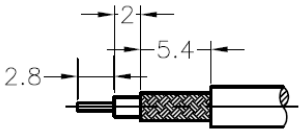

RECOMMENDED CABLE STRIPPING DIM'S

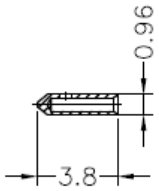

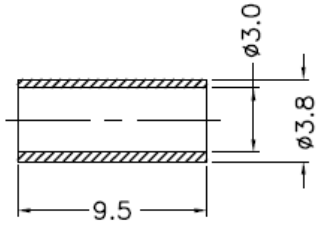

Australian Representatives
ROJONE, PTY LTD.
Tel: 02 9829 1555
E: sales@rojone.com.au
www.rojone.com.au

ALL PARTS SATISFIED ROHS REQUIREMENTS

NOTES:
1. CENTER PIN IS SOLDERED.
2. FERRULE IS CRIMPED TO .128" HEX.

MATERIALS AND PLATING		UNIT: MICRO-INCHES
BODY,SHELL	BRASS C3604	NICKEL/COPPER
CONTACT PIN	C54400	GOLD 15u"/COPPER
INSULATOR	TEFLON MIL-P-19468	NATURAL
FERRULE	COPPER	NICKEL/COPPER
GASKET	SILICONE	RED

ELECTRICAL CHARACTERISTICS	
Impedance	50 Ω
Voltage rating	335V(rms)
Frequency range	0~3GHz
Dielectric withstanding voltage	500V
Contact resistance	Center contact≤1.5 mΩ
	Outer contact≤1 mΩ
Insulation resistance	≥5000MΩ
Insertion loss	N/A
RF- leakage	N/A
VSWR	1.3 MAX.
3rd Intermodulation	--

MECHANICAL CHARACTERISTICS	
Force to engage and disengage	6 lbs MAX.
Center contact retention force	6 lbs MIN.
Recommended coupling torque	6-10 in-lbs
Coupling nut retention force	≥ 100 lbs
Durability	≥ 500 cycles

ENVIRONMENTAL CHARACTERISTICS	
Temperature range	-55°C- +155°C
Thermal shock	US MIL- STD 202, Meth. 107, Cond. B
Vibration	US MIL- STD 202, Meth. 204, Cond. B
Shock	US MIL- STD 202, Meth. 213, Cond. I

MATL:

USED ON:

UNLESS OTHERWISE SPECIFIED
ALL DIMENSIONS ARE IN mm
MACHINED SURFACES FINISH 1.6 RMS MAX.
REMOVE ALL BURRS 0.15X45° MAX. BREAK MACHINE CORNERS 0.15X45° MAX. FILLET R.
TOLERANCES ON DECIMALS
.X ± 0.3 .XX ± 0.25
ANGLES ± 0.5 FRACTIONS ± N/A

DFTM. N. N. N
DATE 4/22/14
CHKD. J. D. B.
DATE 4/23/14
APPD. J. D. B.
DATE 4/23/14

TIMES MICROWAVE SYSTEMS

SC-100-NM
N Male
for LMR-100A

SCALE: N/A | DWG. SIZE A | DO NOT SCALE DRAWING | CODE IDENT 68999 | SHT. 1 of 1 | SD3190-3029 | REV. B